Baseball Bat Balance Beam

Product: 1000074

A naturally appearing baseball bat with a wood finish makes for a very unique balance beam. Constructed of durable Glass Fiber Reinforced Concrete (GFRC) to create a great look and feel. Challenges kids' balance and stability and provides fun.

Baseball Bat Balance Beam
1000074
L: 6'-0" x W: 0'-10" x H: 0'-10"
300 LBS

All images and concepts are Copyright © 2016, Cre8Play, LLC-All rights reserved. Cre8Play may change or modify this information as necessary and without notice.

~ Dimensions and weights are approximate ~
~ Heights shown from top of surfacing ~
User Group Age: 2-12

Revised 12/1/2021

5121 Winnetka Ave N • Suite 108
New Hope, MN 55428
612.670.8195
info@cre8play.com
cre8play.com

Baseball Bat Balance Beam

Product: 1000074

Installation Instructions

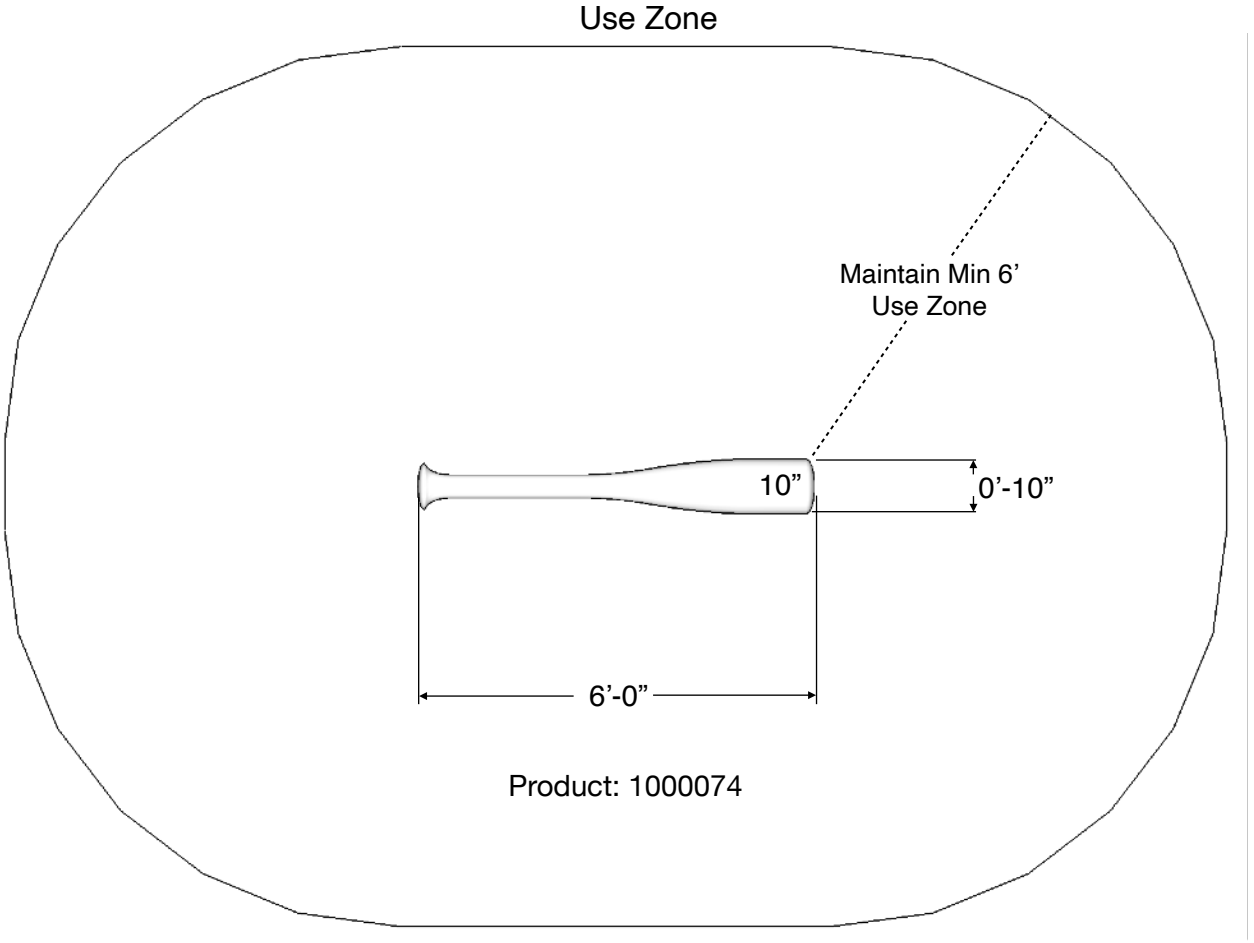

All images and concepts are Copyright © 2016, Cre8Play, LLC-All rights reserved. Cre8Play may change or modify this information as necessary and without notice.

~ All dimensions are approximate ~

User Group Age: 2-12

Last Revised 12/1/2021

5121 Winnetka Ave N • Suite 108
New Hope, MN 55428
612.670.8195
info@cre8play.com
cre8play.com

Installation Instructions

In-Ground

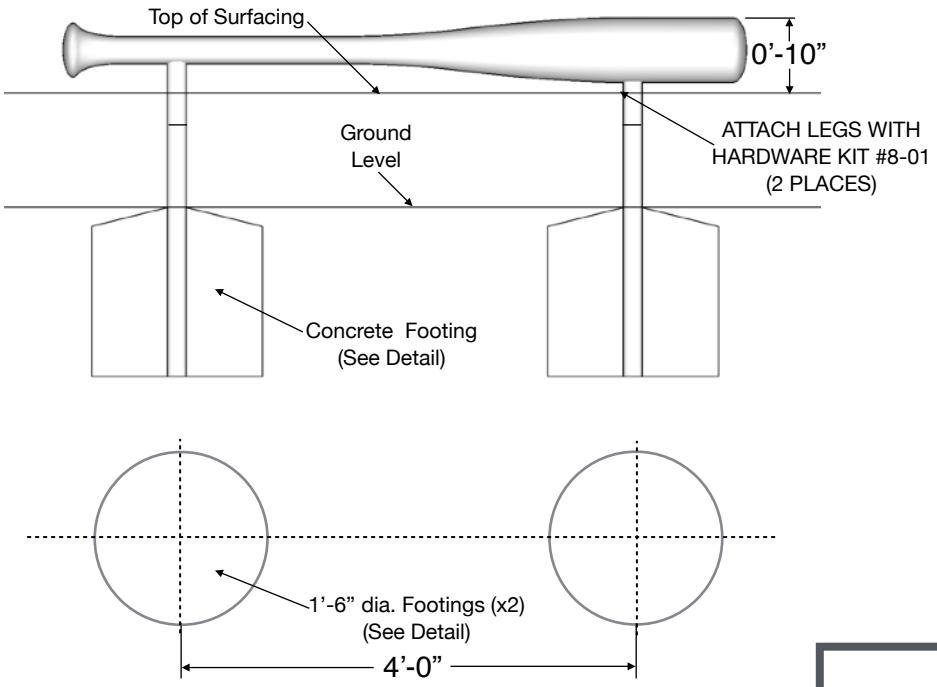

Product: 1000074 - In-Ground

HARDWARE KIT 8-01

3/8" X 2 3/4" BUTTON HEAD, PIN-IN, SS BOLT	X2
3/8" FLAT WASHER, SS	X4
3/8" SPLIT LOCK WASHER, SS	X2
3/8" NYLOCK LOCK NUT, SS	X2

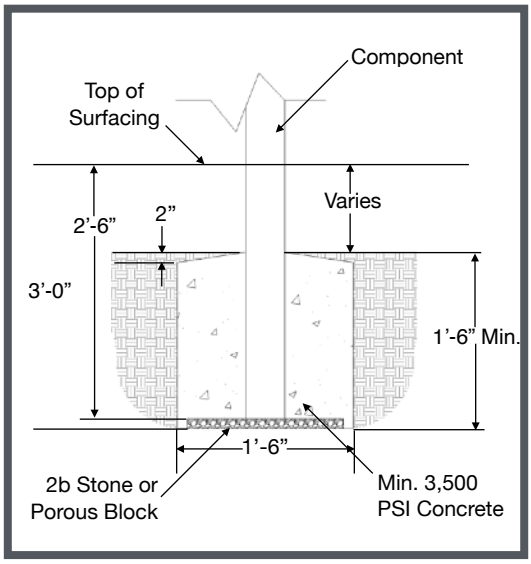

Typical Component Footing Detail
Check local soil conditions.
(Not to Scale)

Included Items:

Item	Description	Quantity
Balance Beam	Play Equipment	1
Legs & Hardware	Mounting Hardware	2

All images and concepts are Copyright © 2016, Cre8Play, LLC-All rights reserved. Cre8Play may change or modify this information as necessary and without notice.

~ All dimensions are approximate ~
User Group Age: 2-12
Last Revised 12/1/2021

5121 Winnetka Ave N • Suite 108
New Hope, MN 55428
612.670.8195
info@cre8play.com
cre8play.com

Installation Instructions

In-Ground

NOTE: Read installation instructions thoroughly before starting installation process.

Step 1: Lay out the area and prepare the site for install. Concrete must be installed over a solid, level base. Check local soil condition and codes. See product installation instructions for minimum use zone requirements to ensure proper spacing and adequate surfacing area.

Step 2: Refer to the typical in-ground footing detail on excavating a hole for the the Baseball Bat Balance Beam.

Step 3: Place balance beam posts onto the stone or porous block at the bottom of the excavated hole. Ensure any space between the bottom of the balance beam and top of grade will be completely covered by your particular type of surfacing. Temporarily brace the balance beam.

Step 4: Pour concrete footings for the Baseball Bat Balance Beam. Refer to the typical footing section on the typical in-ground mounted footing page. This concrete should be flush with the ground level. Allow time for the concrete to completely cure before removing temporary bracing. Refer to the surfacing manufacturer for installation of an approved impact attenuating play surface around the Baseball Bat Balance Beam a minimum of 6 feet in every direction.

NOTES PRIOR TO CONSTRUCTION:

- Use appropriate equipment to lift and move the play equipment.
- Check local codes and requirements prior to digging or installing any equipment.

All images and concepts are Copyright © 2016, Cre8Play, LLC-All rights reserved. Cre8Play may change or modify this information as necessary and without notice.

~ All dimensions are approximate ~
User Group Age: 2-12
Last Revised 12/1/2021

5121 Winnetka Ave N • Suite 108
New Hope, MN 55428
612.670.8195
info@cre8play.com
cre8play.com

Installation Instructions

Surface Mount

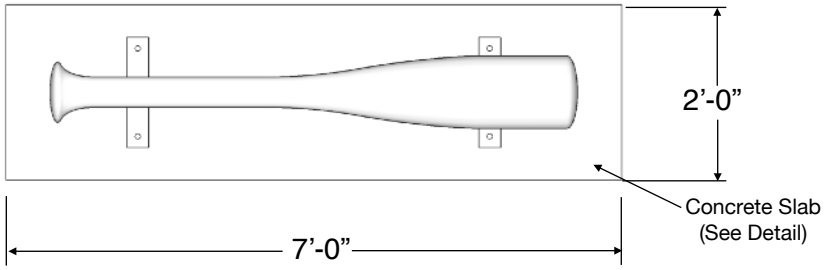

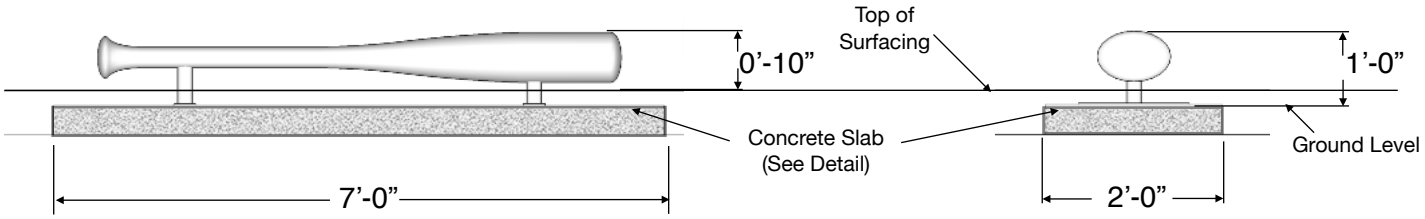

Product: 1000074 - Surface Mount

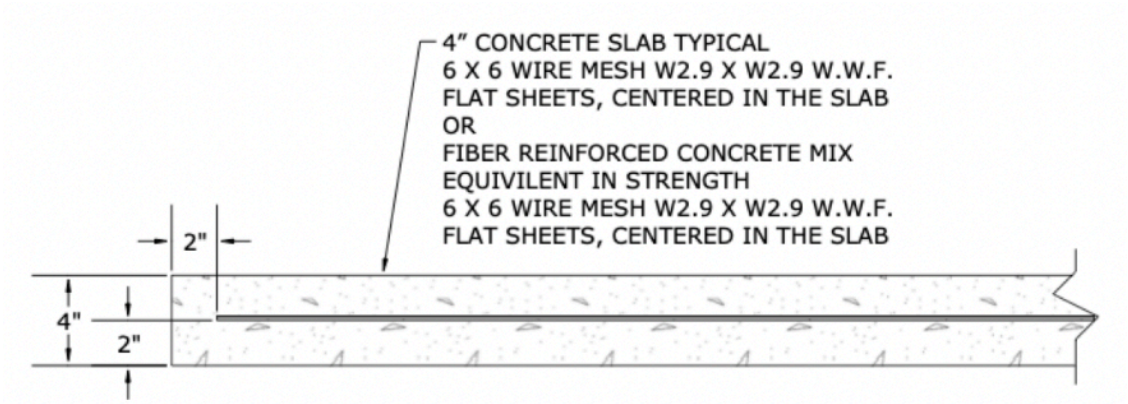

TYPICAL 4" CONCRETE SLAB DETAIL (NOT TO SCALE)
CHECK LOCAL SOIL CONDITIONS.

Included Items:

Item	Description	Quantity
Balance Beam	Play Equipment	1
Anchor Bolt 1/2" x 3"	Mounting Hardware	4

All images and concepts are Copyright © 2016, Cre8Play, LLC-All rights reserved. Cre8Play may change or modify this information as necessary and without notice.

~ All dimensions are approximate ~
User Group Age: 2-12
Last Revised 12/1/2021

5121 Winnetka Ave N • Suite 108
New Hope, MN 55428
612.670.8195
info@cre8play.com
cre8play.com

Installation Instructions

Surface Mount

NOTE: Read installation instructions thoroughly before starting installation process.

Step 1: Lay out the area and prepare the site for install. Concrete must be installed over a solid, level base. Check local soil condition and codes. See installation instructions for minimum use zone requirements to ensure proper spacing and adequate surfacing area.

Step 2: Pour a concrete base for the Baseball Bat Balance Beam. Refer to the typical slab section in these installation instructions. This concrete should be flush with the ground level. Allow time for the concrete to completely cure before continuing.

Step 3: Using an appropriate lull-type forklift or boom, place balance beam into final installation location. See the hardware recommendation page for information on anchoring equipment down to your slab. Refer to the surfacing manufacturer for installation of an approved impact attenuating play surface around the Baseball Bat Balance Beam with a minimum of 6 feet in every direction.

NOTES PRIOR TO CONSTRUCTION:

- Use appropriate equipment to lift and move the play equipment.
- Check local codes and requirements prior to digging or installing any equipment.

All images and concepts are Copyright © 2016, Cre8Play, LLC-All rights reserved. Cre8Play may change or modify this information as necessary and without notice.

~ All dimensions are approximate ~
User Group Age: 2-12
Last Revised 12/1/2021

5121 Winnetka Ave N • Suite 108
New Hope, MN 55428
612.670.8195
info@cre8play.com
cre8play.com

Installation Instructions

Surface Mount

Step 4: Locate your anchor bolts, supplied by Cre8Play. Using the proper standard drill bit size noted in the installation table, drill the concrete to the appropriate hole depth (C).

Step 5: Insert the anchor bolt into the hole and tighten until the bolt is fully seated. Do NOT over tighten the anchor bolts.

Installation Table

Anchor Bolt Size	ANSI Standard Drill Bit Diameter	Anchor Head (Socket Size) Diameter (A)	Minimum Embedment (B)	Hole Depth (C)
1/2" x 3"	7/16"	3/4"	2 1/2"	3 1/2"

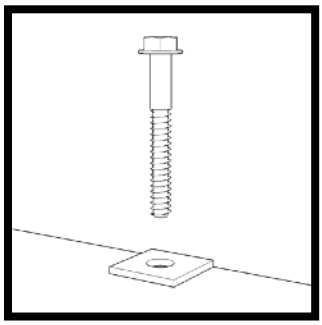

Mounting Detail
(Not to Scale)

Anchor Bolt (Large Diameter Tapcon) Installation:

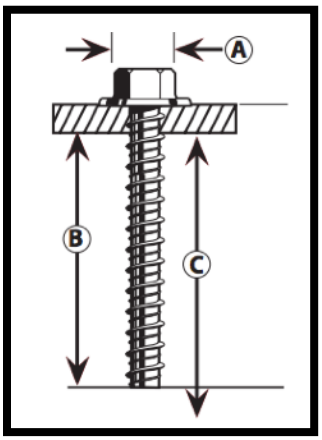

Step 1: Drill

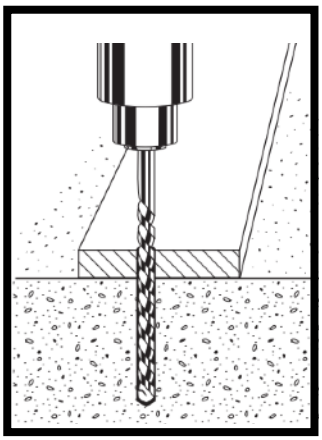

Step 2: Anchor

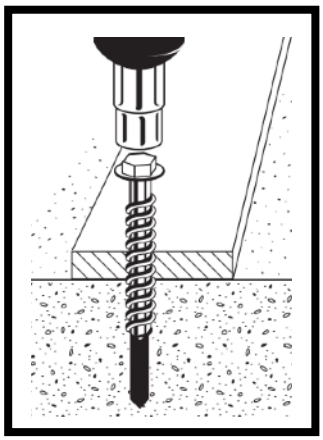

NOTE: Always wear eye protection appropriate to the task at hand.

All images and concepts are Copyright © 2016, Cre8Play, LLC-All rights reserved. Cre8Play may change or modify this information as necessary and without notice.

~ All dimensions are approximate ~
User Group Age: 2-12
Last Revised 12/1/2021

5121 Winnetka Ave N • Suite 108
New Hope, MN 55428
612.670.8195
info@cre8play.com
cre8play.com